DocuSign Envelope ID: CA1A06BA-4ECB-49F6-895A-0C45ADA2D97C

6/2/99

PAVEMENT SCHEDULE

FINAL PAVEMENT DESIGN

C1	PROP. APPROX. 3″ ASPHALT CONCRETE SURFACE COURSE, TYPE S9.5B, AT AN AVERAGE RATE OF 165 LBS. PER SQ. YD. IN EACH OF TWO LAYERS.	T	EARTH MATERIAL.
C2	PROP. VAR. DEPTH ASPHALT CONCRETE SURFACE COURSE, TYPE S9.5B, AT AN AVERAGE RATE OF 110 LBS. PER SQ. YD. PER 1″ DEPTH. TO BE PLACED IN LAYERS NOT TO EXCEED 2″ IN DEPTH.	U	EXISTING PAVEMENT.
E1	PROP. APPROX. 5½″ ASPHALT CONCRETE BASE COURSE, TYPE B25.0C, AT AN AVERAGE RATE OF 627 LBS. PER SQ. YD.	V	3″ MILLING
E2	PROP. VAR. DEPTH ASPHALT CONCRETE BASE COURSE, TYPE B25.0C, AT AN AVERAGE RATE OF 114 LBS. PER SQ. YD. PER 1″ DEPTH. TO BE PLACED IN LAYERS NOT LESS THAN 3″ IN DEPTH OR GREATER THAN 5½″ IN DEPTH.	V1	1½″ MILLING
		W	VARIABLE DEPTH ASPHALT PAVEMENT (SEE STANDARD WEDGING DETAIL)

NOTE: PAVEMENT EDGE SLOPES ARE 1:1 UNLESS SHOWN OTHERWISE.

PROJECT REFERENCE NO.	SHEET NO.
17BP.1.R.87	2A-1

ROADWAY AND PAVEMENT DESIGN ENGINEER
2/1/2021 | 09:36:30 EST

NORTH CAROLINA PROFESSIONAL SEAL 21116 ENGINEER BOB A. MAY

WETHERILL ENGINEERING
1223 Jones Franklin Rd. Suite 164
Raleigh, N.C. 27606
License No. F-0377
Bus: 919 851 8077
Fax: 919 851 8107

TRANSPORTATION PLANNING/DESIGN - BRIDGE/STRUCTURE DESIGN
CIVIL/SITE DESIGN - GIS/GPS - CONSTRUCTION OBSERVATION

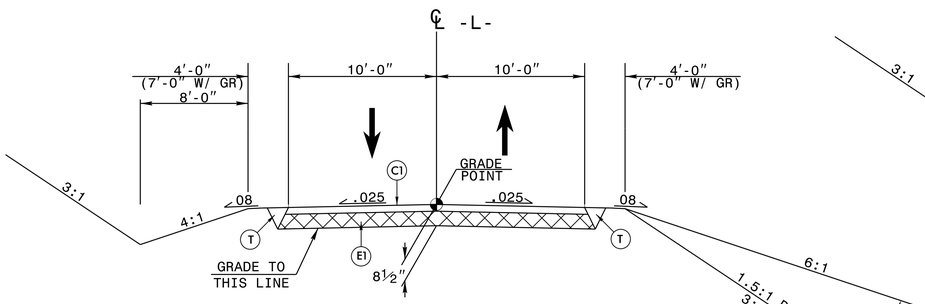

TYPICAL SECTION NO. 1

USE TYPICAL SECTION NO. 1 AS FOLLOWS:
-L- STA. 19+49.00 TO -L- STA. 19+62.32(BEGIN BRIDGE)
-L- STA. 20+94.69 (END BRIDGE) TO -L- STA. 21+09.00

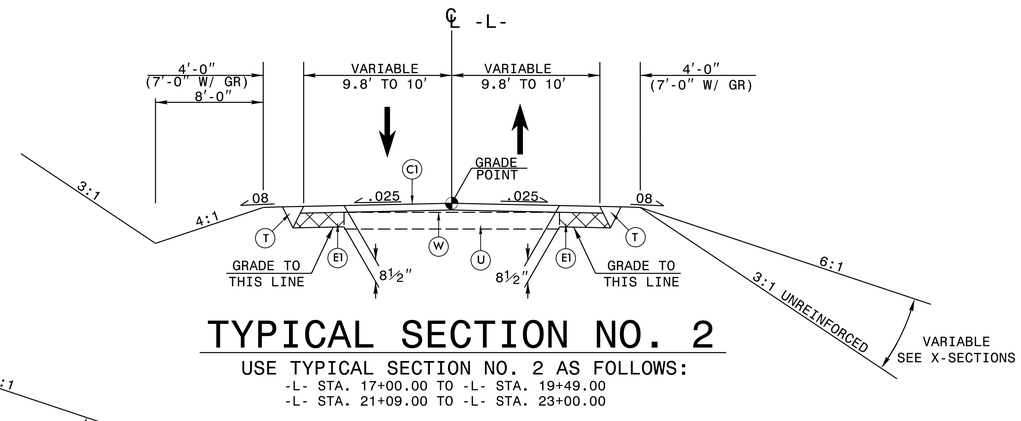

TYPICAL SECTION NO. 2

USE TYPICAL SECTION NO. 2 AS FOLLOWS:
-L- STA. 17+00.00 TO -L- STA. 19+49.00
-L- STA. 21+09.00 TO -L- STA. 23+00.00

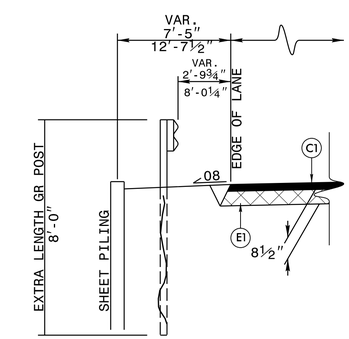

DETAIL OF SHEET PILING

-L- LT. STA. 17+99.25 TO -L- LT. STA. 19+52.42
-L- LT. STA. 20+95.87 TO -L- LT. STA. 21+50.37
-L- RT. STA. 18+74.37 TO -L- RT. STA. 19+66.87
-L- RT. STA. 20+94.30 TO -L- RT. STA. 21+24.97

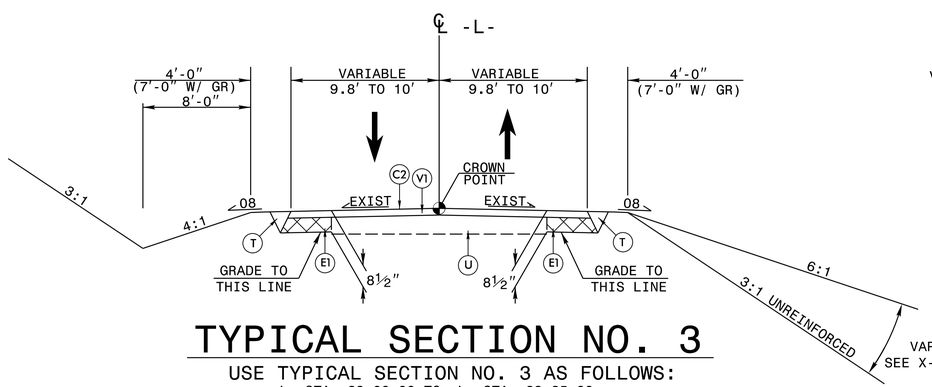

TYPICAL SECTION NO. 3

USE TYPICAL SECTION NO. 3 AS FOLLOWS:
-L- STA. 23+00.00 TO -L- STA. 23+25.00

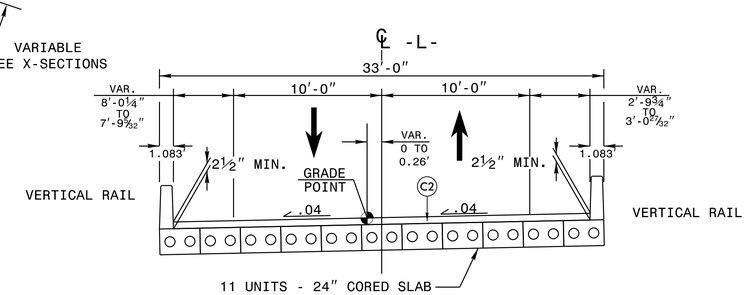

TYPICAL SECTION NO. 4

USE TYPICAL SECTION NO. 4 AS FOLLOWS:
-L- STA. 19+62.32 TO -L- STA. 20+94.69

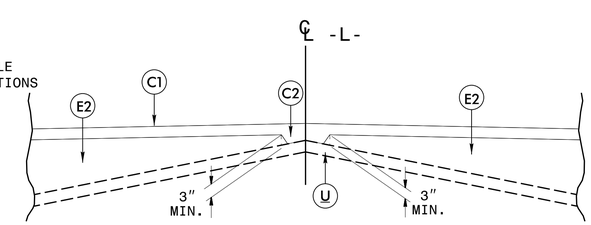

Detail Showing Method of Wedging

INCIDENTAL MILLING DETAIL

Perform the work in accordance with Section 607 of the January 2012 North Carolina Department of Transportation Standard Specifications for Roads and Structures. Resurfacing will be accomplished at the same time as the milling operation.

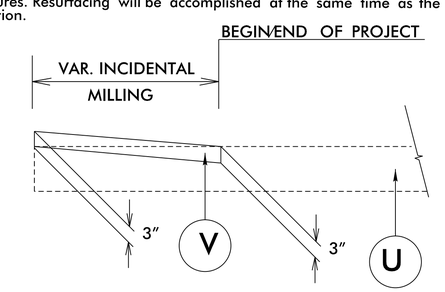

NOTE: UTILIZE INCIDENTAL MILLING TO MAKE PAVEMENT TIE-INS
-L- STA. 17+00.00 TO -L- STA. 18+30.00
-L- STA. 22+10.00 TO -L- STA. 23+00.00

8/13/2020
17BP.1.R.87_Rdy_psh_02_typ.dgn
USERhmay