DocuSign Envelope ID: C3C7D983-3B91-476F-AAFC-595E5DD30DEC

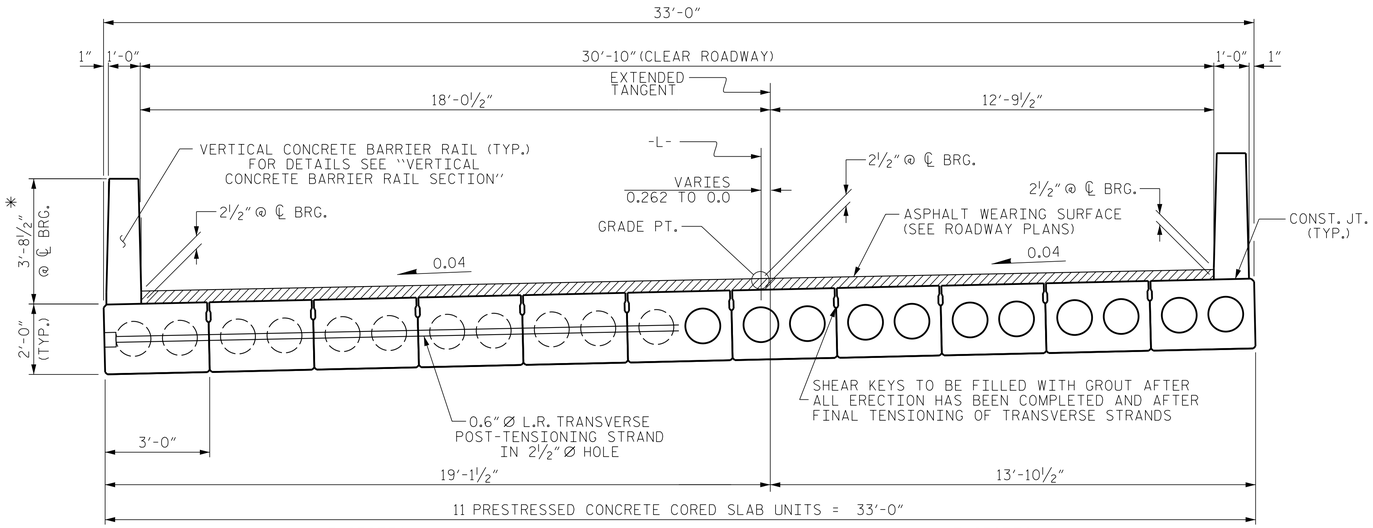

HALF SECTION AT INTERMEDIATE DIAPHRAGMS

HALF SECTION THROUGH VOIDS

TYPICAL SECTION

* - THE MAXIMUM BARRIER RAIL HEIGHT AND ASPHALT THICKNESS IS SHOWN. THE HEIGHT OF THE BARRIER RAIL AND ASPHALT THICKNESS VARIES WHILE THE TOP OF THE BARRIER RAIL FOLLOWS THE PROFILE OF THE GUTTERLINE. FOR RAIL HEIGHT DETAILS AND ASPHALT THICKNESS, SEE THE "VERTICAL CONCRETE BARRIER RAIL SECTION" DETAIL.

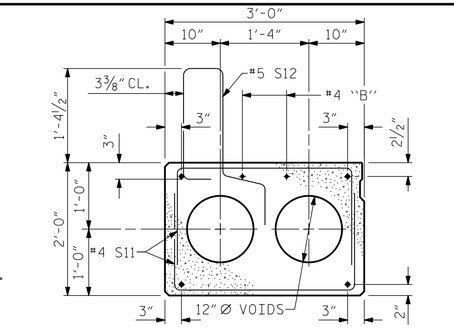

EXTERIOR SLAB SECTION

(FOR PRESTRESSED STRAND LAYOUT, SEE INTERIOR SLAB SECTION.)

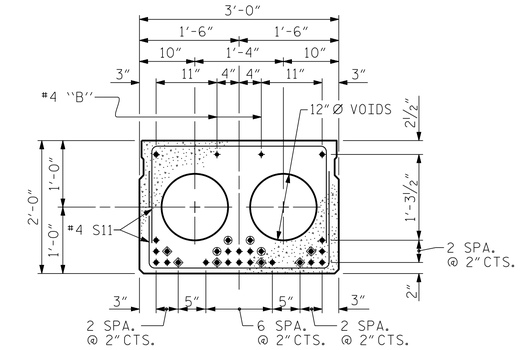

INTERIOR SLAB SECTION (60' UNIT)

(24 STRANDS REQUIRED)

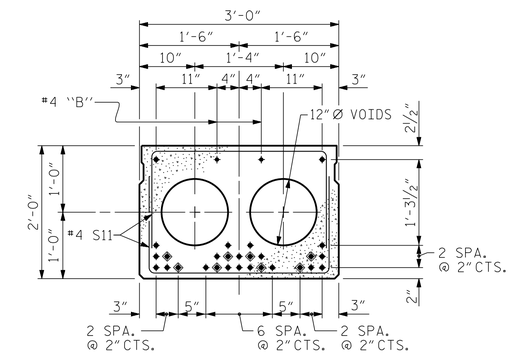

INTERIOR SLAB SECTION (70' UNIT)

(28 STRANDS REQUIRED)

0.6" Ø LOW RELAXATION STRAND LAYOUT

◈ BOND SHALL BE BROKEN ON THESE STRANDS FOR A DISTANCE OF 12'-0" FROM END OF CORED SLAB UNIT. SEE STANDARD SPECIFICATIONS, ARTICLE 1078-7.

◉ OPTIONAL FULL LENGTH DEBONDED STRANDS. THESE STRANDS ARE NOT REQUIRED. IF THE FABRICATOR CHOOSES TO INCLUDE THESE STRANDS IN THE CORED SLAB UNIT, THE STRANDS SHALL BE DEBONDED FOR THE FULL LENGTH OF THE UNIT AT NO ADDITIONAL COST. SEE STANDARD SPECIFICATIONS, ARTICLE 1078-7.

DEBONDING LEGEND

FIXED END

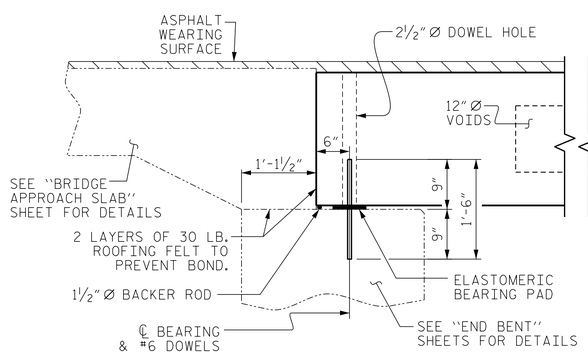

SECTION AT END BENT

FIXED END FIXED END

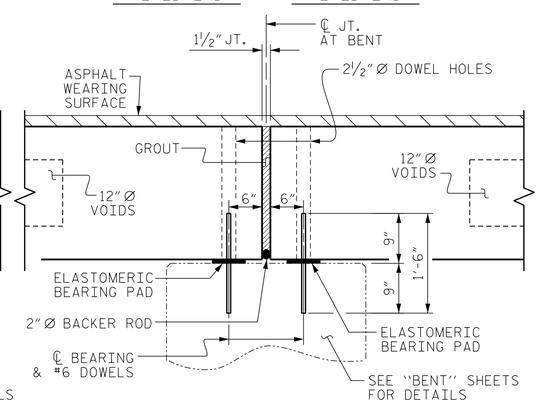

SECTION AT BENT

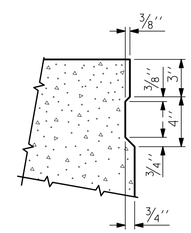

SHEAR KEY DETAIL

NOTE: OMIT SHEAR KEY ON OUTSIDE FACE OF EXTERIOR CORED SLABS.

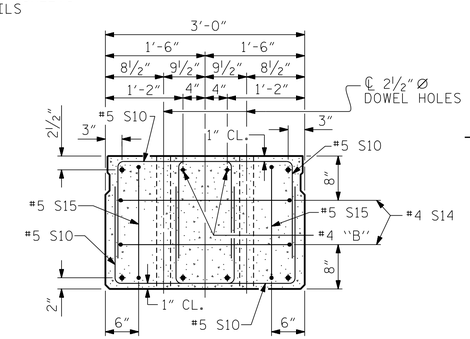

END ELEVATION

SHOWING PLACEMENT OF DOUBLE STIRRUPS AND LOCATION OF DOWEL HOLES. (STRAND LAYOUT NOT SHOWN.) INTERIOR SLAB UNIT SHOWN-EXTERIOR SLAB UNIT SIMILAR EXCEPT SHEAR KEY LOCATION.

PERMITTED THREADED INSERT CAST IN OUTSIDE FACE OF EXTERIOR UNIT AND RECESSED ⅜". SIZE TO BE DETERMINED BY CONTRACTOR.

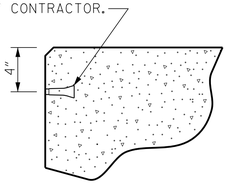

THREADED INSERT DETAIL

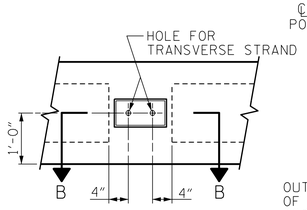

ELEVATION VIEW

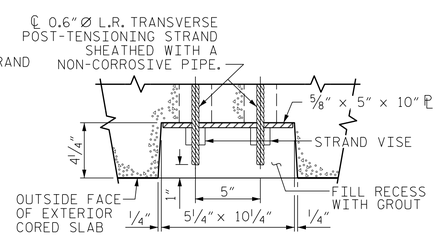

SECTION B-B

GROUTED RECESS AT END OF POST-TENSIONED STRAND-CORED SLABS

PROJECT NO. 17BP.1.R.87

TYRRELL COUNTY

STATION: 20+28.50 -L-

SHEET 1 OF 5

ENGINEER OF RECORD
8/21/2019

NORTH CAROLINA PROFESSIONAL SEAL 14091 ENGINEER BUCK CHARLES HUNT

DocuSigned by: Buck Charles Hunt

WETHERILL ENGINEERING
1223 Jones Franklin Rd.
Raleigh, N.C. 27606
Bus: 919 851 8077
Fax: 919 851 8107
LICENSE NO. F-0377

DOCUMENT NOT CONSIDERED FINAL UNLESS ALL SIGNATURES COMPLETED

STATE OF NORTH CAROLINA
DEPARTMENT OF TRANSPORTATION
RALEIGH

STANDARD

3'-0" X 2'-0" PRESTRESSED CONCRETE CORED SLAB UNIT

REVISIONS								SHEET NO.
NO.	BY:	DATE:	NO.	BY:	DATE:			S-5
1			3					TOTAL SHEETS
2			4					22

STD. NO. 24PCS4_33_90S

ASSEMBLED BY : J. PENDERGRAFT	DATE : 4-19		
CHECKED BY : J. DILWORTH	DATE : 4-19		
DRAWN BY : MAA 6/10	REV. 9/14	MAA/TMG	
CHECKED BY : MKT 7/10			

P:\2018\18161.01_Tyrrell 17\Structures\DGN\17BP.1.R.87_SMU_TS.dgn
8/20/2019 2:47:50 PM