DocuSign Envelope ID: C3C7D983-3B91-476F-AAFC-595E5DD30DEC

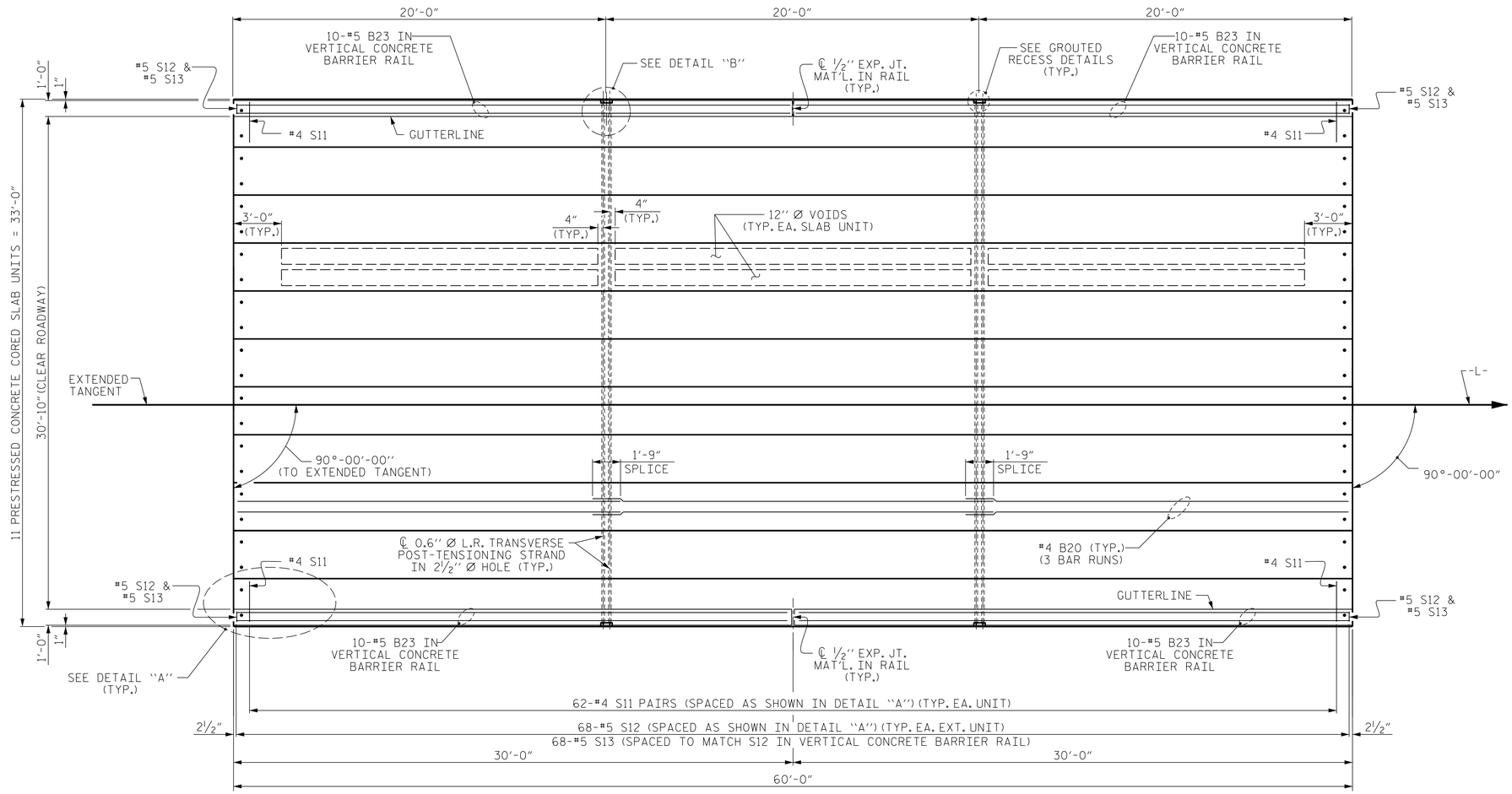

PLAN OF UNIT

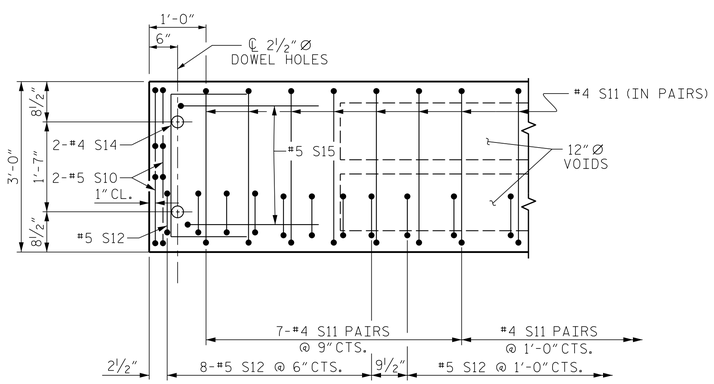

DETAIL "A"

(TYPICAL EACH END OF UNIT)
NOTE: EXTERIOR UNIT SHOWN - INTERIOR UNIT SIMILAR EXCEPT OMIT #5 S12 BARS.

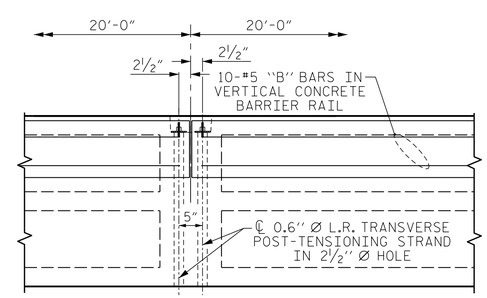

DETAIL "B"

#4 S11 BARS MAY BE SHIFTED AS NECESSARY TO MAINTAIN 1" CLEAR TO GROUTED RECESS AND 2 1/2" Ø TRANSVERSE POST-TENSIONING STRAND HOLES

PROJECT NO. 17BP.1.R.87
TYRRELL COUNTY
STATION: 20+28.50 -L-

SHEET 2 OF 5

STATE OF NORTH CAROLINA
DEPARTMENT OF TRANSPORTATION
RALEIGH

PLAN OF 60' UNIT
30'-10" CLEAR ROADWAY
90° SKEW
SPAN A

ENGINEER OF RECORD
8/21/2019
NORTH CAROLINA PROFESSIONAL SEAL 14091 ENGINEER BRICK CHARLES HUNT
DocuSigned by: Brick Charles Hunt
WETHERILL ENGINEERING
1223 Jones Franklin Rd.
Raleigh, N.C. 27606
Bus: 919 851 8077
Fax: 919 851 8107
LICENSE NO. F-0377

REVISIONS						SHEET NO.
NO.	BY:	DATE:	NO.	BY:	DATE:	S-6
1			3			TOTAL SHEETS
2			4			22

DOCUMENT NOT CONSIDERED FINAL UNLESS ALL SIGNATURES COMPLETED

DRAWN BY : J. PENDERGRAFT DATE : 4-19
CHECKED BY : J. DILWORTH DATE : 4-19

P:\2018\18 16 1.0.1_Tyrrell 17\Structures\DGN\17BP.1.R.87_SWU_PS.dgn
8/20/2019 2:48:29 PM

STD. NO. 24PCS_33_90S_60L