DocuSign Envelope ID: C3C7D983-3B91-476F-AAFC-595E5DD30DEC

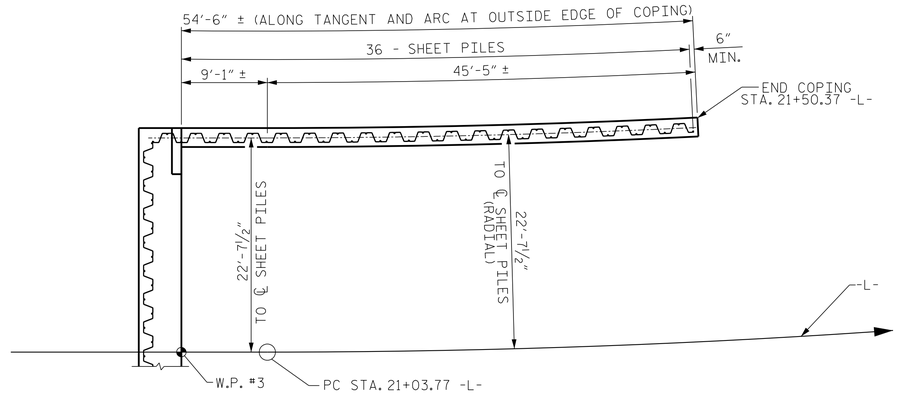


## PLAN OF WING (W1)

## NOTES

SHEET PILING SHALL BE DRIVEN AT AN EVEN OFFSET OF 22'-7½" FROM -L- TO THE ℄ OF THE SHEET PILE OR AS DIRECTED BY THE ENGINEER.

INSTALL SHEET PILING SHOWN ON THIS SHEET STARTING AT THE END BENT AND WORK UPTATION TOWARD STA. 21+50.37 -L- OR AS DIRECTED BY THE ENGINEER.

✳ TOP OF COPING SHALL BE APPROXIMATELY 4" ABOVE PROPOSED SHOULDER OR AS DIRECTED BY THE ENGINEER.

GROOVED CONTRACTION JOINTS, ½" DEPTH, SHALL BE TOOLED IN ALL EXPOSED FACES OF THE COPING AND IN ACCORDANCE WITH ARTICLE 825-10(B) OF THE STANDARD SPECIFICATIONS. THE CONTRACTION JOINTS SHALL BE LOCATED AT 10'-0" ± INTERVALS FOR THE FULL LENGTH OF COPING.

FOR SECTION B-B, SEE SHEET 3 OF 4.

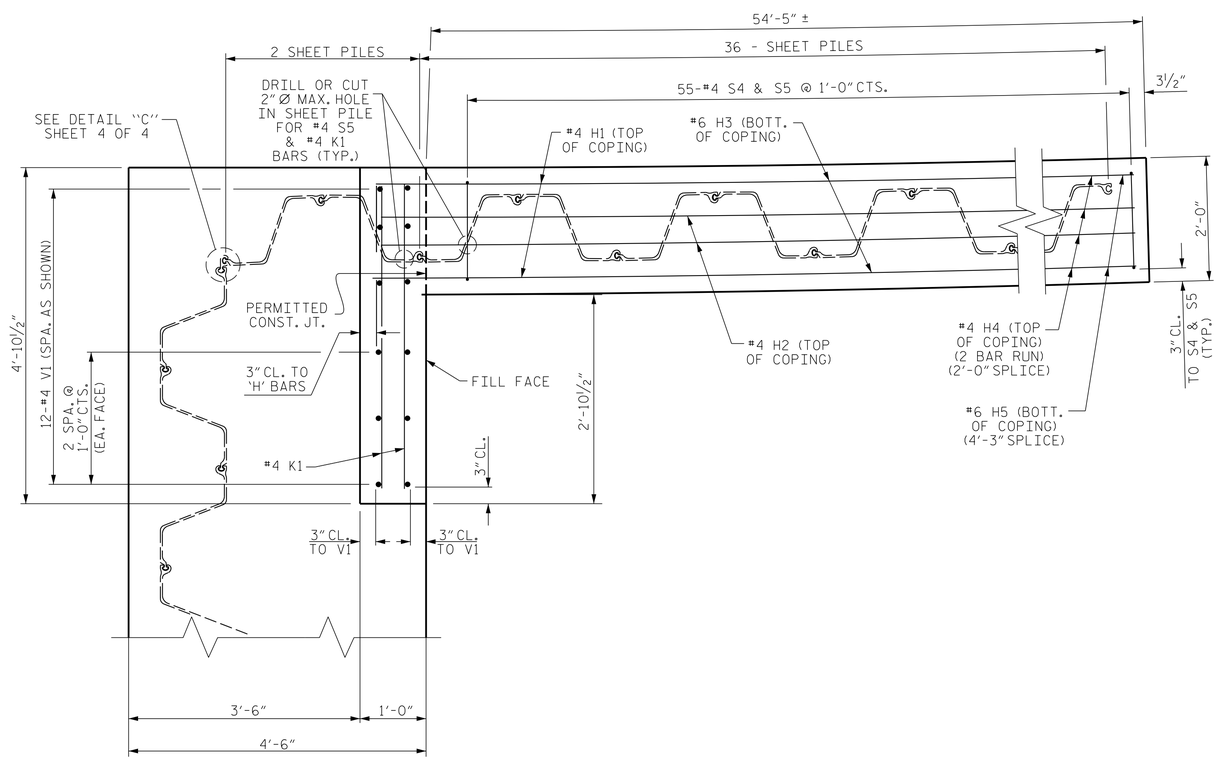


## PLAN OF WING DETAILS (W1)

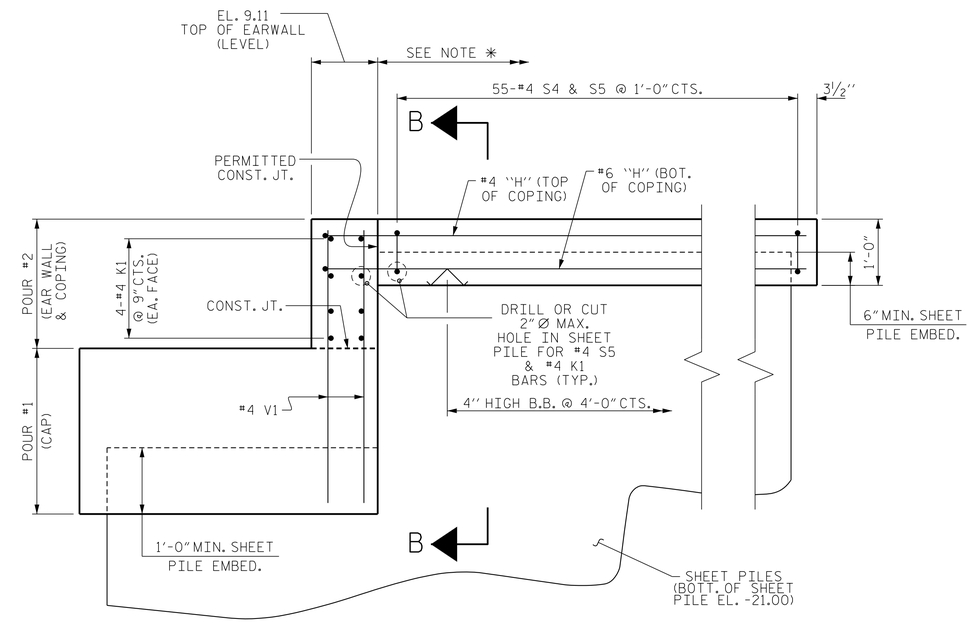


## (W1) ELEVATION OF WING

PROJECT NO. 17BP.1.R.87

TYRRELL COUNTY

STATION: 20+28.50 -L-

SHEET 2 OF 4

ENGINEER OF RECORD
8/21/2019
NORTH CAROLINA PROFESSIONAL SEAL 14091 ENGINEER BUCK CHARLES HUNT

Docusigned by: Buck Charles Hunt

WETHERILL ENGINEERING
1223 Jones Franklin Rd.
Raleigh, N.C. 27606
Bus: 919 851 8077
Fax: 919 851 8107
LICENSE NO. F-0377

STATE OF NORTH CAROLINA
DEPARTMENT OF TRANSPORTATION
RALEIGH

SUBSTRUCTURE
END BENT No. 2

| REVISIONS | | | | | | SHEET NO. |
|---|---|---|---|---|---|---|
| NO. | BY: | DATE: | NO. | BY: | DATE: | S-18 |
| 1 | | | 3 | | | TOTAL SHEETS |
| 2 | | | 4 | | | 22 |

DOCUMENT NOT CONSIDERED FINAL UNLESS ALL SIGNATURES COMPLETED

DRAWN BY : B.C. HUNT DATE : 4-19
CHECKED BY : D. HODGE DATE : 4-19

P:\2018\181101_Tyrrell 17\Structures\DGN\17BP.1.R.87_SMU_EBT.dgn
8/20/2019 2:55:50 PM