DocuSign Envelope ID: C3C7D983-3B91-476F-AAFC-595E5DD30DEC

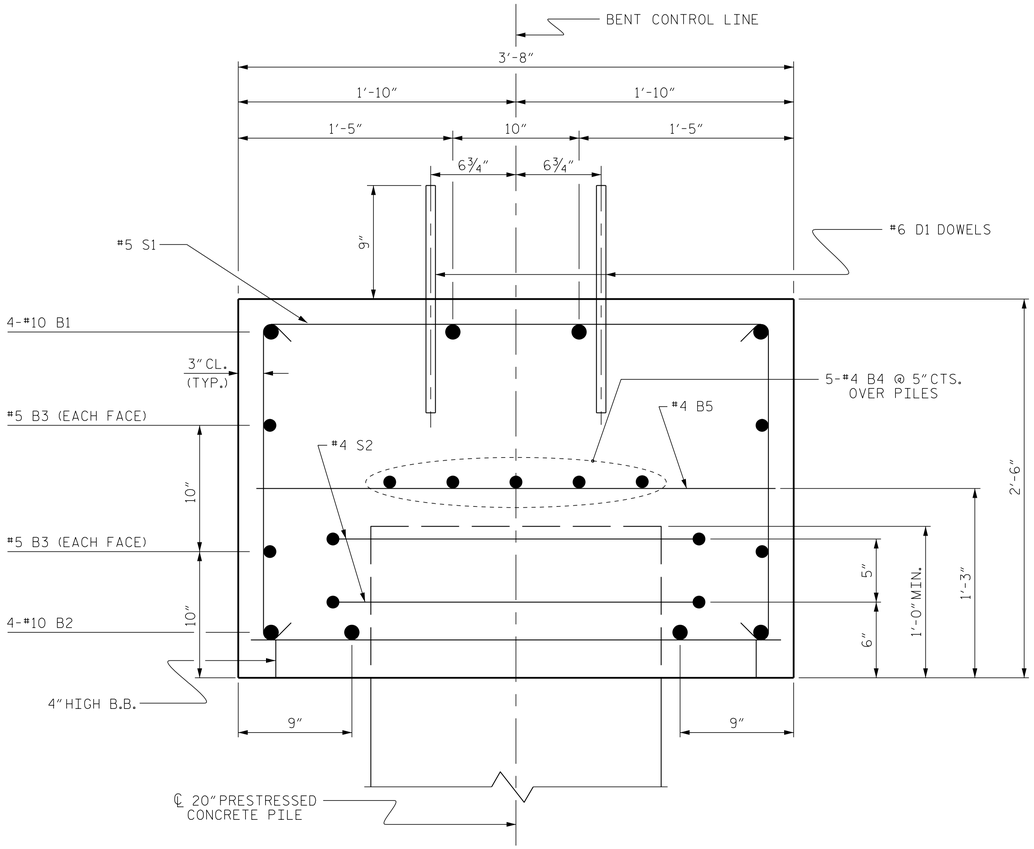

SECTION A-A

BAR TYPES

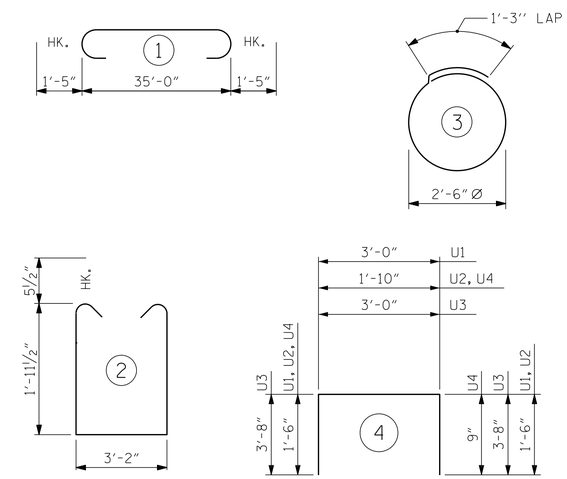

ALL BAR DIMENSIONS ARE OUT TO OUT.

BILL OF MATERIAL

BENT No. 1

BAR	NO.	SIZE	TYPE	LENGTH	WEIGHT
B1	4	#10	1	37'-10"	651
B2	4	#10	STR	35'-0"	602
B3	4	#5	STR	35'-0"	146
B4	10	#4	STR	18'-9"	125
B5	9	#4	STR	3'-2"	19
D1	44	#6	STR	1'-6"	99
S1	32	#5	2	8'-0"	267
S2	14	#4	3	9'-2"	86
U1	4	#4	4	6'-0"	16
U2	4	#4	4	4'-10"	13
U3	2	#9	4	10'-4"	70
U4	4	#4	4	4'-1"	11

REINFORCING STEEL 2105 LBS

CLASS A CONCRETE BREAKDOWN

TOTAL CLASS A CONCRETE ▲ 11.3 C.Y.

20" PRESTRESSED CONCRETE PILES

NO. 7 LIN. FT. 385

PILE DRIVING EQUIPMENT SETUP FOR 20" PRESTRESSED CONCRETE PILES NO. 7

PILE REDRIVES NO. 4

▲ CONCRETE DISPLACED BY THE 20" PRESTRESSED CONCRETE PILES HAS BEEN DEDUCTED FROM THE CONCRETE QUANTITY.

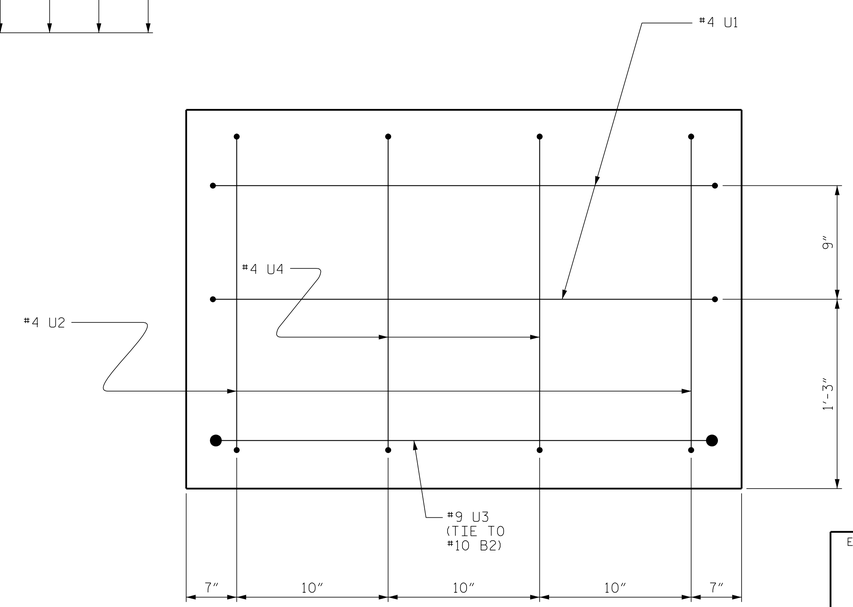

END OF CAP VIEW

(TYPICAL BOTH ENDS)

PROJECT NO. 17BP.1.R.87

TYRRELL COUNTY

STATION: 20+28.50 -L-

SHEET 2 OF 2

ENGINEER OF RECORD
8/21/2019

NORTH CAROLINA PROFESSIONAL SEAL 14091 ENGINEER BUCK CHARLES HUNT

DocuSigned by: Buck Charles Hunt

ETHERILL ENGINEERING

1223 Jones Franklin Rd.
Raleigh, N.C. 27606
Bus: 919 851 8077
Fax: 919 851 8107
LICENSE NO. F-0377

STATE OF NORTH CAROLINA
DEPARTMENT OF TRANSPORTATION
RALEIGH

SUBSTRUCTURE

BENT No. 1

REVISIONS						SHEET NO.
NO.	BY:	DATE:	NO.	BY:	DATE:	S-16
1			3			TOTAL SHEETS
2			4			22

DOCUMENT NOT CONSIDERED FINAL UNLESS ALL SIGNATURES COMPLETED

DRAWN BY : B.C. HUNT DATE : 7-19
CHECKED BY : J.A. DILWORTH DATE : 7-19

P:\2018\18161.01_Tyrrell\17\Structures\DGN\17BP.1.R.87_SMU_BT.dgn
8/20/2019 2:54:26 PM