DocuSign Envelope ID: C3C7D983-3B91-476F-AAFC-595E5DD30DEC

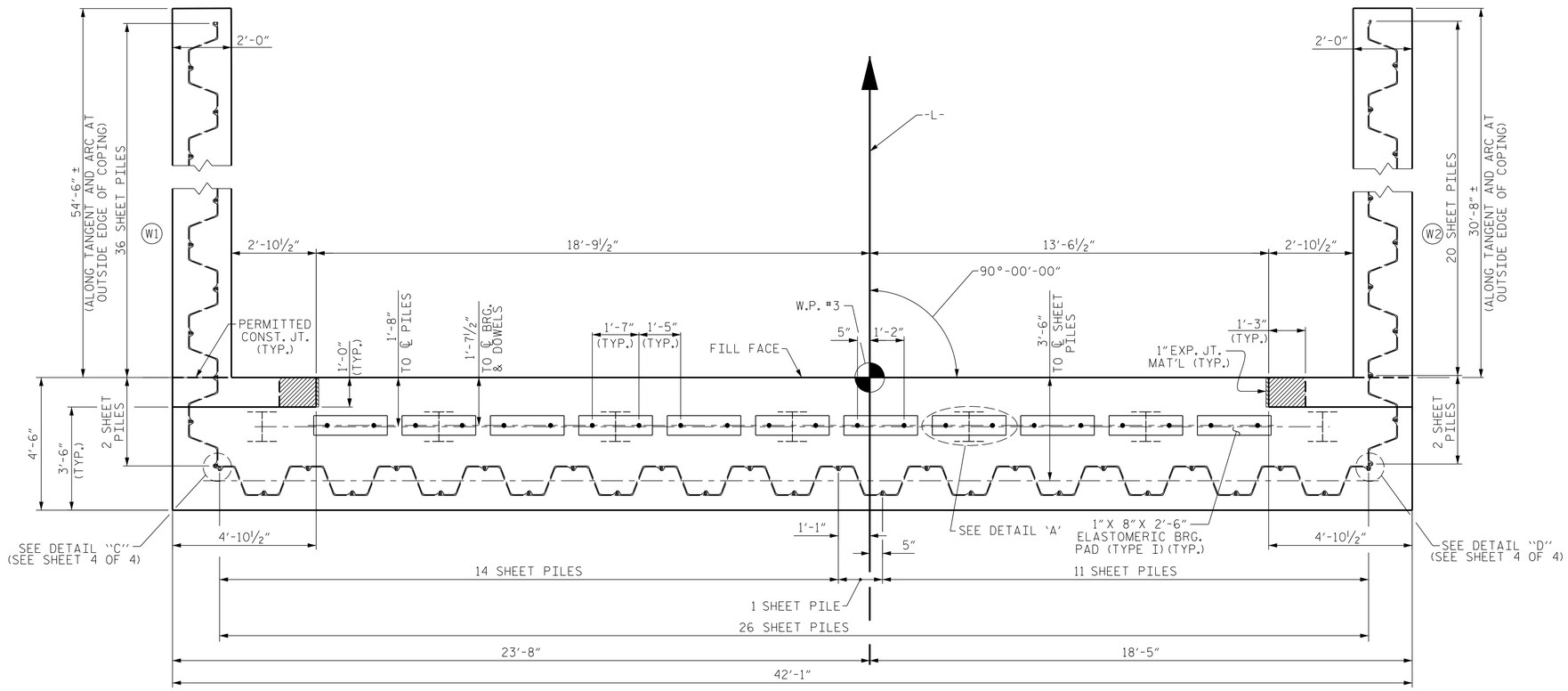

PLAN

NOTES

STIRRUPS IN CAP MAY BE SHIFTED AS NECESSARY TO CLEAR DOWELS.

THE CONCRETE IN THE SHADED AREA OF THE WING SHALL BE POURED AFTER THE VERTICAL CONCRETE BARRIER RAIL IS CAST IF SLIP FORMING IS USED.

INSTALL THE 4" Ø DRAIN THROUGH THE SHEET PILES AS REQUIRED. FOR REINFORCED BRIDGE APPROACH FILLS. SEE ROADWAY PLANS.

PZ-27 STEEL SHEET PILES SHALL BE GALVANIZED. FOR GALVANIZED STEEL SHEET PILES, SEE SPECIAL PROVISIONS.

THE STEEL SHEET PILES SHALL HAVE A MINIMUM SECTION MODULUS OF 30 IN /FT.

THE CONCRETE SHALL CONTAIN SILICA FUME. SILICA FUME SHALL BE SUBSTITUTED FOR 5% OF THE PORTLAND CEMENT BY WEIGHT. IF THE OPTION OF ARTICLE 1024-1 OF THE STANDARD SPECIFICATIONS TO PARTIALLY SUBSTITUTE CLASS F FLY ASH FOR PORTLAND CEMENT IS EXERCISED, THEN THE RATE OF FLY ASH SUBSTITUTION SHALL BE REDUCED TO 1.0 LB OF FLY ASH PER 1.0 LB. NO PAYMENT WILL BE MADE FOR THIS SUBSTITUTION AS IT IS CONSIDERED INCIDENTAL TO THE VARIOUS PAY ITEMS.

FOR COPING-WING DETAILS, SEE SHEETS 2 AND 3 OF 4.

FOR SECTION A-A, SEE SHEET 4 OF 4.

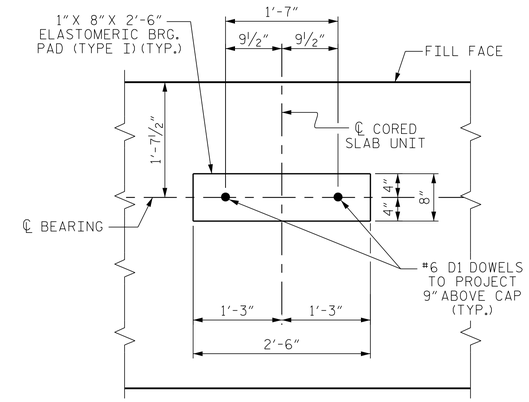

DETAIL "A"

TOP OF PILE ELEVATIONS	
1	4.98
2	5.23
3	5.47
4	5.71
5	5.95
6	6.19
7	6.43

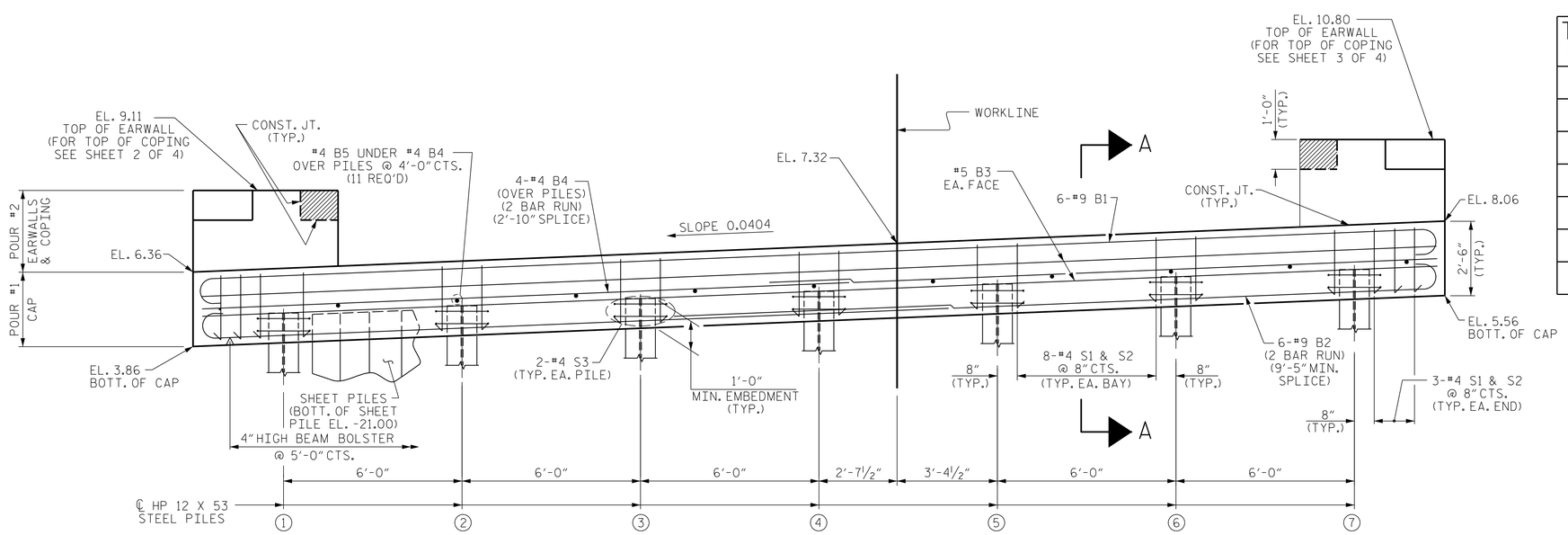

ELEVATION

(SHEET PILES PARTIALLY OMITTED IN ELEVATION VIEW FOR CLARITY)

PROJECT NO. 17BP.1.R.87

TYRRELL COUNTY

STATION: 20+28.50 -L-

SHEET 1 OF 4

ENGINEER OF RECORD
8/21/2019

NORTH CAROLINA PROFESSIONAL SEAL 14091 ENGINEER BUCK CHARLES HUNT

DocuSigned by: Buck Charles Hunt

WETHERILL ENGINEERING
1223 Jones Franklin Rd.
Raleigh, N.C. 27606
Bus: 919 851 8077
Fax: 919 851 8107
LICENSE NO. F-0377

STATE OF NORTH CAROLINA
DEPARTMENT OF TRANSPORTATION
RALEIGH

SUBSTRUCTURE
END BENT No. 2

REVISIONS						SHEET NO.
NO.	BY:	DATE:	NO.	BY:	DATE:	S-17
1			3			TOTAL SHEETS
2			4			22

DRAWN BY : B.C. HUNT DATE : 4-19
CHECKED BY : D. HODGE DATE : 4-19

DOCUMENT NOT CONSIDERED FINAL UNLESS ALL SIGNATURES COMPLETED

P:\2018\181601_Tyrrell\TS\Structures\DGN\17BP.1.R.87_SMU_EBT.dgn
8/20/2019 2:55:18 PM