DocuSign Envelope ID: C3C7D983-3B91-476F-AAFC-595E5DD30DEC

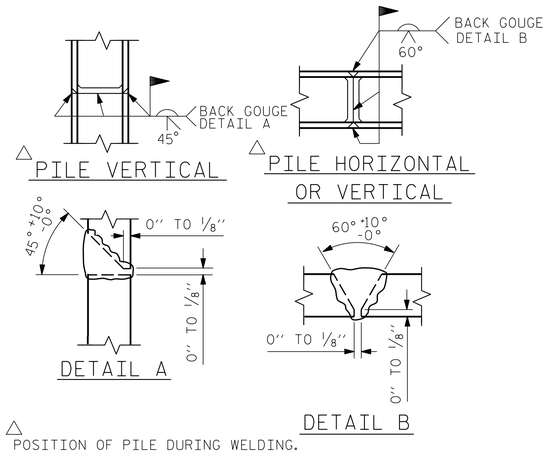

△ POSITION OF PILE DURING WELDING.

PILE SPLICE DETAILS

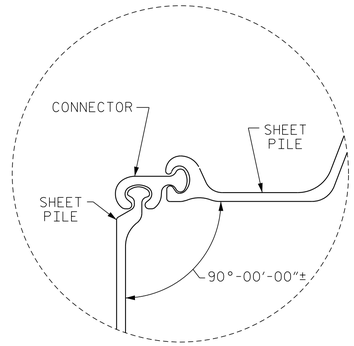

DETAIL "C"

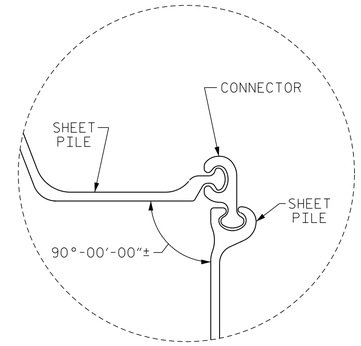

DETAIL "D"

BAR TYPES

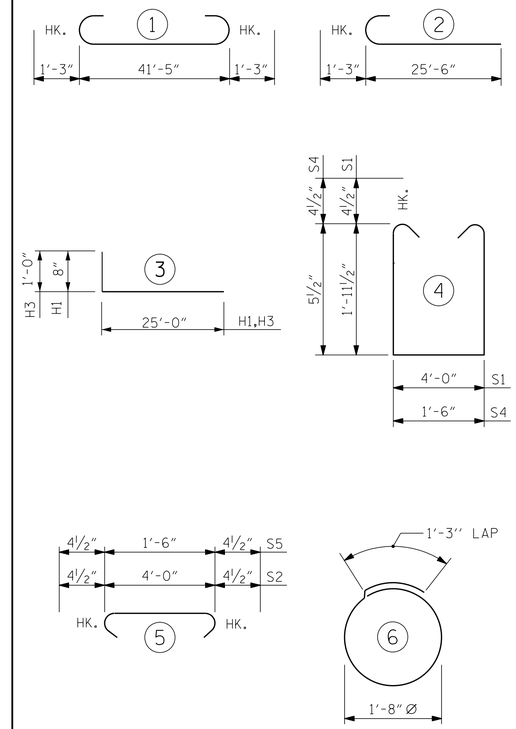

ALL BAR DIMENSIONS ARE OUT TO OUT.

BILL OF MATERIAL

END BENT No. 1

BAR	NO.	SIZE	TYPE	LENGTH	WEIGHT
✳ B1	6	#9	1	43'-11"	896
✳ B2	12	#9	2	26'-9"	1091
✳ B3	4	#5	STR	41'-7"	173
✳ B4	8	#4	STR	22'-3"	119
✳ B5	11	#4	STR	4'-0"	29
✳ D1	22	#6	STR	1'-6"	50
✳ H1	4	#4	3	25'-8"	69
✳ H2	4	#4	STR	25'-0"	67
✳ H3	4	#6	3	26'-0"	156
✳ H4	20	#4	STR	27'-10"	372
✳ H5	6	#6	STR	47'-4"	427
✳ H6	12	#4	STR	24'-8"	198
✳ H7	4	#6	STR	38'-3"	230
✳ K1	8	#4	STR	4'-6"	24
✳ K2	8	#4	STR	4'-2"	22
✳ S1	54	#4	4	8'-8"	313
✳ S2	54	#4	5	4'-9"	171
✳ S3	14	#4	6	6'-6"	61
✳ S4	246	#4	4	3'-2"	520
✳ S5	246	#4	5	2'-3"	370
✳ V1	12	#4	STR	4'-5"	35
✳ V2	12	#4	STR	4'-8"	37

✳ EPOXY COATED REINFORCING STEEL 5,430

CLASS AA CONCRETE:

POUR #1: CAP 17.5 C.Y.
POUR #2: EARWALLS & COPING 19.2 C.Y.

TOTAL 36.7 C.Y.

HP 12 X 53 STEEL PILES
NO: 7 LIN. FT.= 490

PILE REDRIVES EACH: 4

GALVANIZED STEEL SHEET PILES

NO.	193	SQ. FT.	11,626
NO. CONNECTOR	= 2	SQ. FT.	20
TOTAL NO.	195	SQ. FT.	11,646

PILE DRIVING EQUIPMENT SETUP FOR HP 12 X 53 STEEL PILES EACH: 7

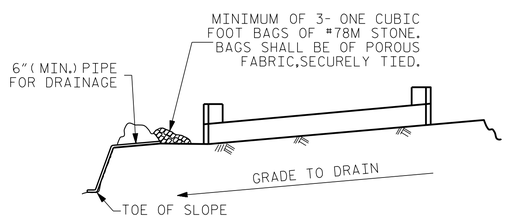

BAGGED STONE AND PIPE SHALL BE PLACED IMMEDIATELY AFTER COMPLETION OF END BENT EXCAVATION. PIPE MAY BE EITHER CONCRETE, CORRUGATED STEEL, CORRUGATED ALUMINUM ALLOY, OR CORRUGATED PLASTIC. PERFORATED PIPE WILL NOT BE ALLOWED.

BAGGED STONE SHALL REMAIN IN PLACE UNTIL THE ENGINEER DIRECTS THAT IT BE REMOVED. THE CONTRACTOR SHALL REMOVE AND DISPOSE OF SILT ACCUMULATIONS AT BAGGED STONE WHEN SO DIRECTED BY THE ENGINEER. BAGS SHALL BE REMOVED AND REPLACED WHENEVER THE ENGINEER DETERMINES THAT THEY HAVE DETERIORATED AND LOST THEIR EFFECTIVENESS.

NO SEPARATE PAYMENT WILL BE MADE FOR THIS WORK AND THE ENTIRE COST OF THIS WORK SHALL BE INCLUDED IN THE UNIT CONTRACT PRICE BID FOR THE SEVERAL PAY ITEMS.

TEMPORARY DRAINAGE AT END BENT

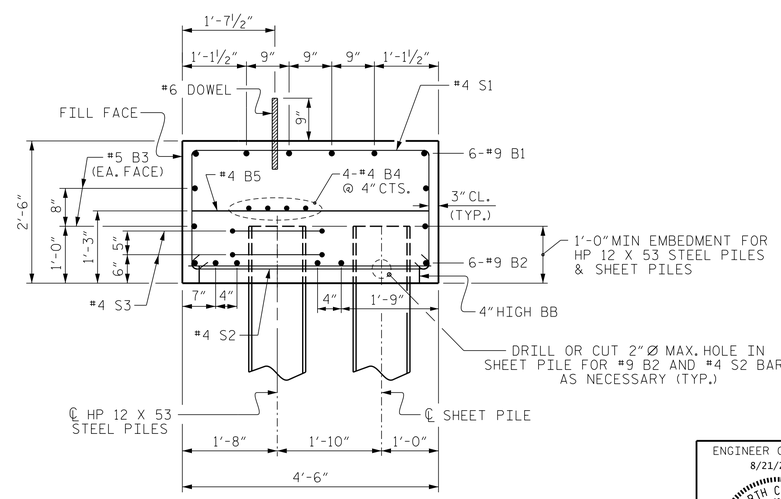

SECTION A-A

PROJECT NO. 17BP.1.R.87
TYRRELL COUNTY
STATION: 20+28.50 -L-

SHEET 4 OF 4

ENGINEER OF RECORD
8/21/2019

NORTH CAROLINA PROFESSIONAL SEAL 14091 ENGINEER BUCK CHARLES HUNT

DocuSigned by: Buck Charles Hunt

WETHERILL ENGINEERING
1223 Jones Franklin Rd.
Raleigh, N.C. 27606
Bus: 919 851 8077
Fax: 919 851 8107
LICENSE NO. F-0377

STATE OF NORTH CAROLINA
DEPARTMENT OF TRANSPORTATION
RALEIGH

SUBSTRUCTURE
END BENT No. 1

REVISIONS						SHEET NO.
NO.	BY:	DATE:	NO.	BY:	DATE:	S-14
1			3			TOTAL SHEETS
2			4			22

DOCUMENT NOT CONSIDERED FINAL UNLESS ALL SIGNATURES COMPLETED

DRAWN BY : B.C. HUNT DATE : 4-19
CHECKED BY : D. HODGE DATE : 4-19

P:\2018\181601_Tyrrell17\Structures\DGN\17BP.1.R.87_SMU_EBT.dgn
8/20/2019 2:53:14 PM