DocuSign Envelope ID: C3C7D983-3B91-476F-AAFC-595E5DD30DEC

NOTES

STIRRUPS IN CAP MAY BE SHIFTED AS NECESSARY TO CLEAR DOWELS.

★ INVERT ALTERNATE STIRRUPS.

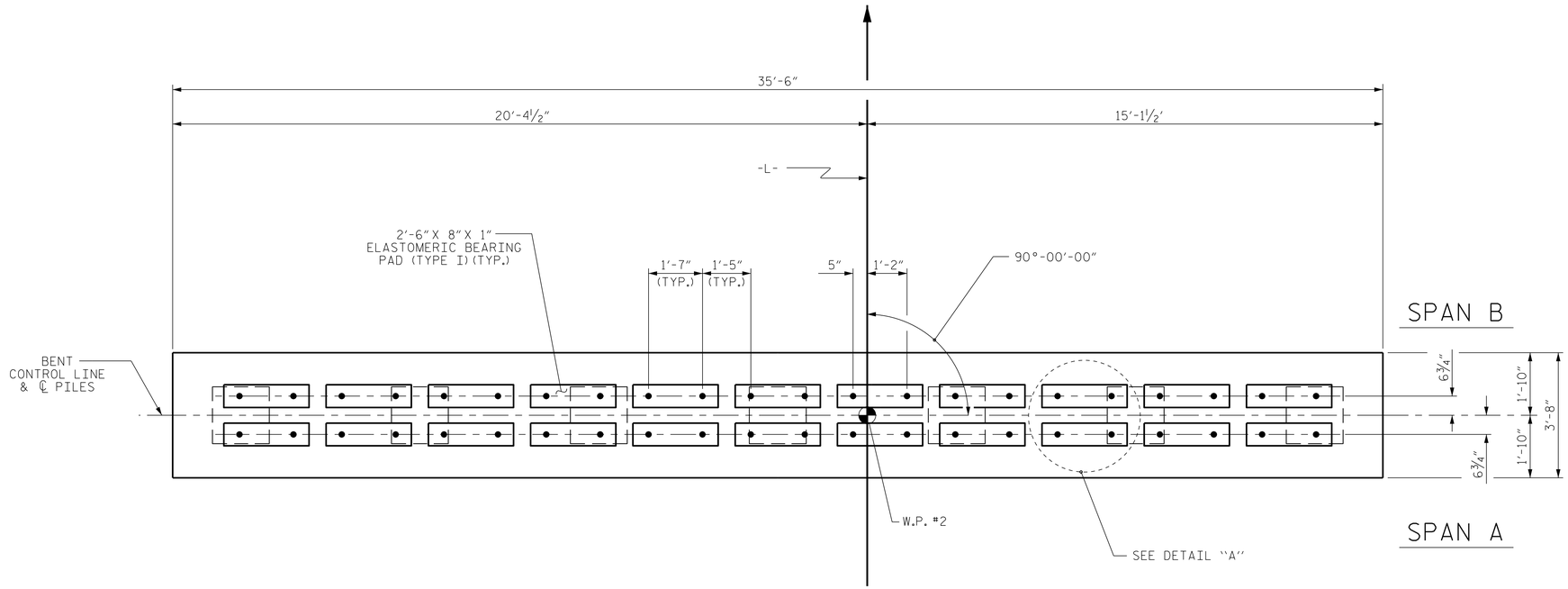

PLAN

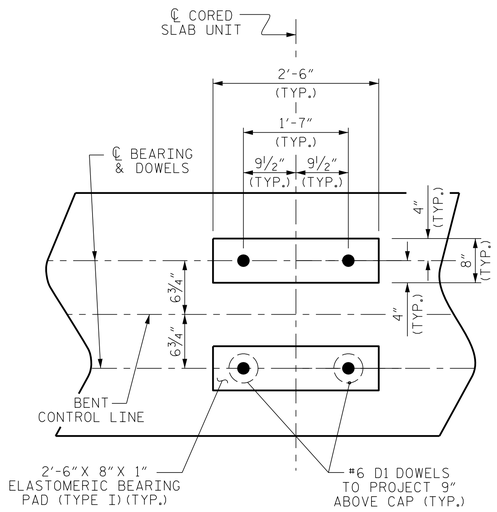

DETAIL "A"

(DIMENSIONS ARE TYPICAL EACH BEARING)

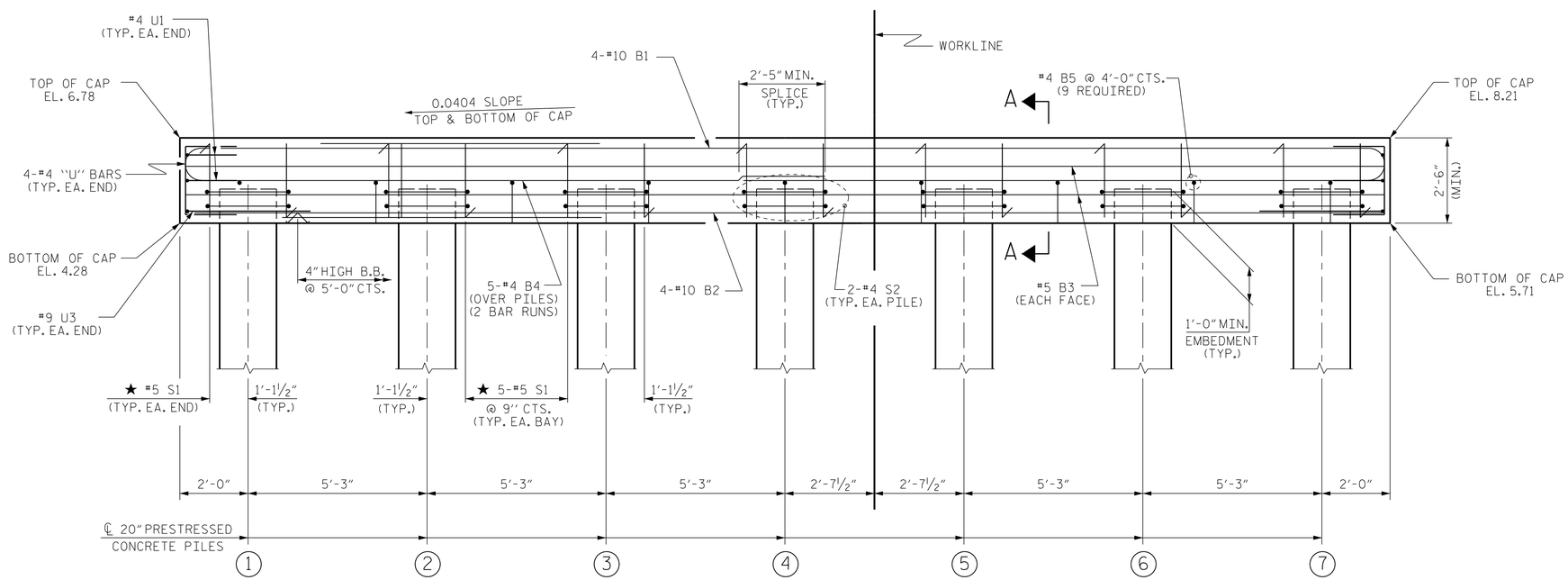

ELEVATION

FOR SECTION A-A, SEE SHEET 2 OF 2

TOP OF PILE ELEVATIONS	
1	5.36
2	5.57
3	5.78
4	6.00
5	6.21
6	6.42
7	6.63

PROJECT NO. 17BP.1.R.87

TYRRELL COUNTY

STATION: 20+28.50 -L-

SHEET 1 OF 2

ENGINEER OF RECORD
8/21/2019

NORTH CAROLINA PROFESSIONAL SEAL 14091 ENGINEER BRICK CHARLES HUNT

DocuSigned by: Brick Charles Hunt

WETHERILL ENGINEERING
1223 Jones Franklin Rd.
Raleigh, N.C. 27606
Bus: 919 851 8077
Fax: 919 851 8107
LICENSE NO. F-0377

STATE OF NORTH CAROLINA
DEPARTMENT OF TRANSPORTATION
RALEIGH

SUBSTRUCTURE

BENT No. 1

REVISIONS							SHEET NO.
NO.	BY:	DATE:	NO.	BY:	DATE:		S-15
1			3				TOTAL SHEETS
2			4				22

DRAWN BY : B.C. HUNT DATE : 7-19
CHECKED BY : J.A. DILWORTH DATE : 7-19

DOCUMENT NOT CONSIDERED FINAL UNLESS ALL SIGNATURES COMPLETED

P:\2018\181601_Tyrrell17\Structures\DGN\17BP.1.R.87_SMU_BT.dgn
8/20/2019 2:53:58 PM